Hacer título más resumido

ACOUSTIC CABINET FANS
Centribox CVB-CVT Series, Forward Curved Centrifugal Fans

Description

The Centribox CVB-CVT range of acoustic cased fans are specifically designed to provide ventilation solutions for noise sensitive environments. The range comprises of four nominal product sizes covering 17 models in total. All models incorporate direct-drive low pressure centrifugal fans.

The CVB-CVT range is available in:
– Single phase, 230V 50Hz, with four (4) and six (6) pole speed motors.
– Three Phase, 230/400V 50Hz with six (6) pole speed motors

Air volume performance ranges from 500 up to 6,500 m^3/hr.

Applications

The Centribox CVB-CVT range are suitable for many general ventilation applications where the noise level of the ventilation system is of particular importance. Typical installations would include:

– Commercial offices.
– Restaurants and cafes.
– Libraries and public buildings etc.

Construction

Casing
The fan casings are manufactured from heavy gauge galvanised sheet steel and internally lined with a dense “non-flammable” Melanex (M1 Type) acoustic insulation. All models are supplied, as standard, with circular duct connection flanges on the discharge and inlet panels. However a variety of different connectors are available - see product accessories.
The specific design of the product enables the casing side panels to be removed and the motor / impeller assembly accessed without having to remove the fan case from the ducting.

All models are supplied with four mounting feet and an industrial grade cable entry gland (located on discharge panel side) to facilitate installation and wiring.

Fans
All models incorporate double inlet direct-drive low pressure centrifugal fans (with scroll) with galvanised steel forward curved impellers. All fan assemblies are fitted to the casing discharge panel using a rigid support frame with two anti-vibration mountings.

Motors
All motors are factory matched and directly mounted to the scrolled fan casing using a rigid support frame. The complete motor, impeller and fan scroll assembly is then dynamically balanced to ISO1940 stanards. The CVB-CVT motors incorporate the following standard specifications:
– Single Phase, 230V 50Hz, supplied with capacitor.
– Three Phase 230/400V 50Hz.
– Thermal Overload Protection (internal automatic operation for all single phase models).

Technical characteristics

Model Type	Curve nº	Speed (r.p.m.)	Motor power absorbed (CV)	Protection	Insulation class	Absorbed current single phase 50 Hz 230 V (A)	Absorbed current three phase 50 Hz 230 V (A)	Absorbed current three phase 50 Hz 400 V (A)	Max. air volume (m^3/h)	Sound pressure level* (dB(A))	Weight (kg)
					6 POLE						
CVB-180/180 – 1/10	**1**	900	1/10	IP-44	B	0,9	–	–	1410	54	22
CVB-240/180 – 1/6	**2**	900	1/6	IP-44	B	1,7	–	–	2430	62	34
CVB-240/180 – 1/3	**3**	900	1/3	IP-44	B	1,9	–	–	2680	63	35
CVB-240/240 – 1/6	**4**	900	1/6	IP-44	B	1,7	–	–	2600	63	35
CVB-240/240 – 1/3	**5**	900	1/3	IP-44	B	1,4	–	–	2720	63	36
CVB-270/200 – 1/3	**6**	900	1/3	IP-44	F	3,0	–	–	3430	64	41
CVB-270/200 – 1/2	**7**	900	1/2	IP-44	F	4,0	–	–	3950	65	42
CVB-270/270 – 1/3	**8**	900	1/3	IP-44	F	3,0	–	–	3550	65	43
CVB-270/270 – 1/2	**9**	900	1/2	IP-44	F	4,0	–	–	4340	66	44
CVB-320/240 – 3/4	**10**	900	3/4	IP-44	F	5,8	–	–	5400	68	55
CVT-320/240 – 1,5	**11**	900	1,5	IP-44	F	–	7,0	4,0	7000	70	55
CVB-320/320 – 3/4	**12**	900	3/4	IP-44	F	5,8	–	–	5670	69	58
CVT-320/320 – 1,5	**13**	900	1,5	IP-44	F	–	7,0	4,0	8570	71	58
					4 POLE						
CVB-180/180 – 1/5	**14**	1400	1/5	IP-44	F	1,3	–	–	1400	64	23
CVB-240/240 – 1/2	**15**	1400	1/2	IP-44	F	3,5	–	–	2640	72	38
CVB-270/200 – 1/2	**16**	1400	1/2	IP-44	F	4,2	–	–	3160	74	44
CVB-270/270 – 3/4	**17**	1400	3/4	IP-44	F	6,2	–	–	3730	76	46

*Measured at discharge with maximum air volume (at 1.5m).

Performance curves

– Q = Air volume in, m^3/hr and m^3/s – Pe = Static pressure in mmWG and Pa.
– Dry air at 20 ºC and 760 mmHg.
– Air flow data in accordance with the following standards: UNE 100-212-89, BS 848, Part 1, AMCA 210-85 and ASHRAE 51-1985.

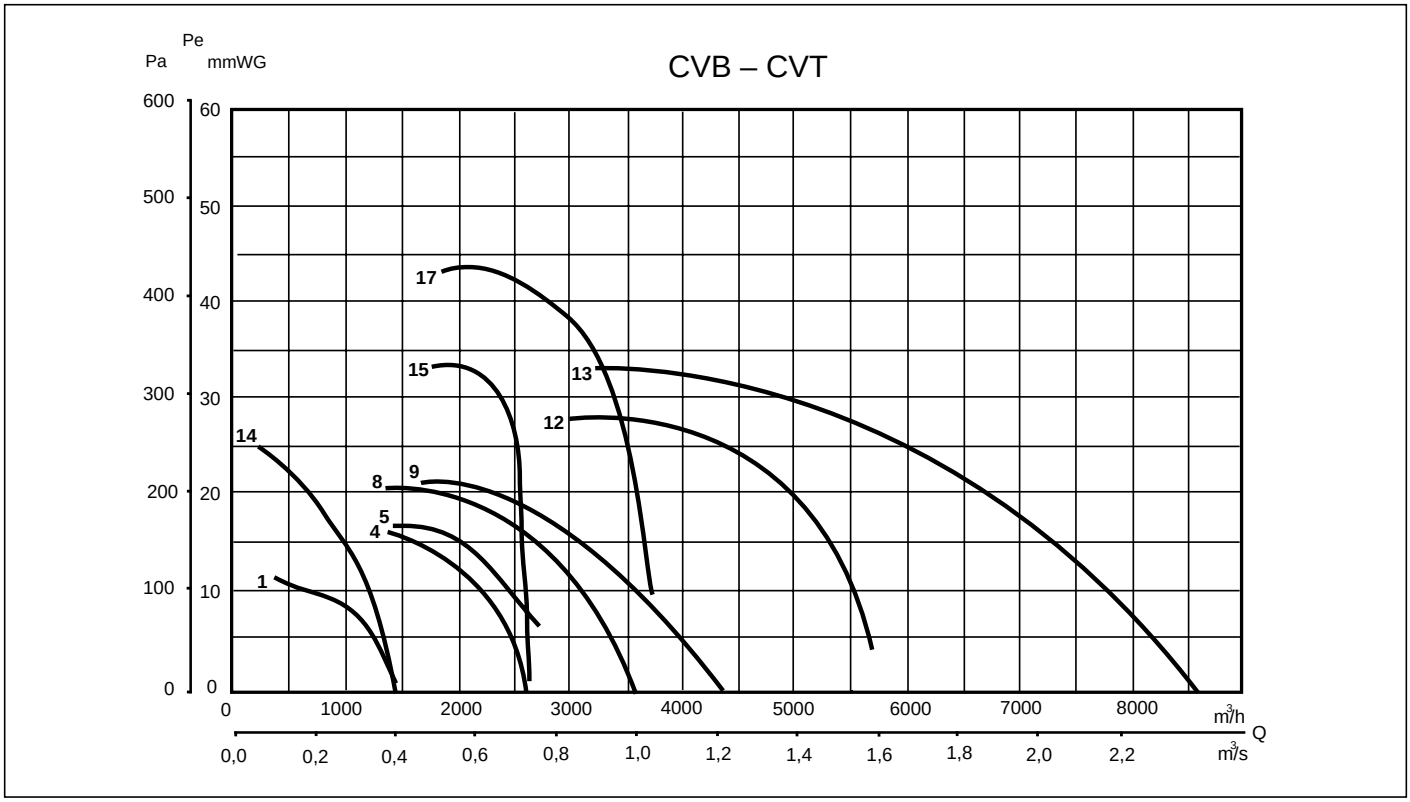

Please refer to technical characteristics table.

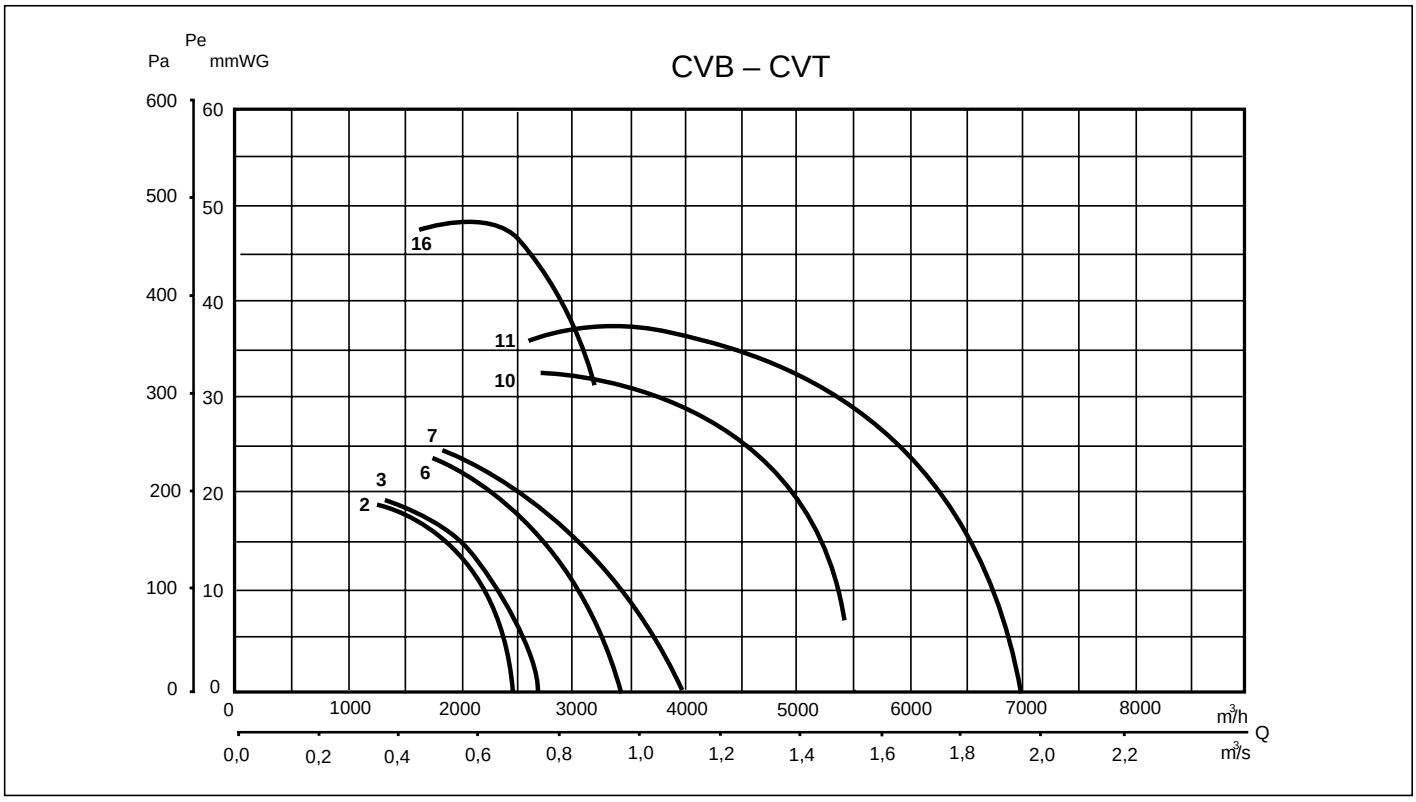

Please refer to technical characteristics table.

Mounting accessories

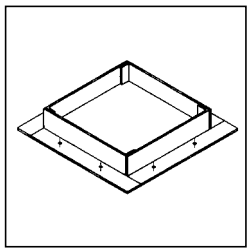

CBR
Rectangular Duct Connectors
These can be used instead of the circular spigots supplied as standard.

Type	Nominal connection flange (mm)
CVB-180	CBR-250 x 250
CVB-240	CBR 350 x 350
CVB-270	CBR 400 x 400
CVB / T-320	CBR 450 x 450

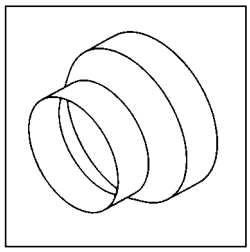

CRC
Circular Reducers
Circular ducting connection reducers. To enable the connection of smaller diameter ducting.

Type	Nominal diameters of reducers available (mm)		
CVB-180	CRC – 250/200	–	
CVB-240	CRC – 355/315	CRC – 355/250	
CVB-270	CRC – 400/355	CRC – 400/315	CRC – 400/250
CVB / T-320	CRC – 500/450	CRC – 500/400	CRC – 500/315

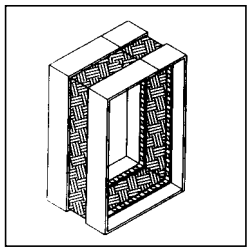

KAA-KAD
Flexible Couplings
Circular flexible connectors type KAA.
Rectangular flexible connectors type KAD.

	Rectangular		Circular	
Type	Air supply+CBR	Inlet	Air supply	Inlet+CAC
CVB-180	KAD – 250 x 250	KAD – 325 x 325	KAA – 250	KAA – 250
CVB-240	KAD – 350 x 350	KAD – 400 x 400	KAA – 355	KAA – 355
CVB-270	KAD – 400 x 400	KAD – 450 x 450	KAA – 400	KAA – 400
CVB / T-320	KAD – 450 x 450	KAD – 500 x 500	KAA – 500	KAA – 500

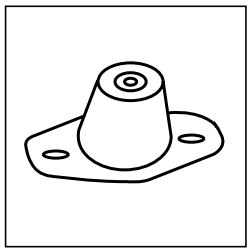

KSE
Anti-vibration Mounts
(set of 4)
Rubber anti-vibration mounts to reduce vibration transmission.

Type	Type KSE
CVB-180	KSE – 45
CVB-240	KSE – 45
CVB-270	KSE – 45
CVB / T-320	KSE – 45

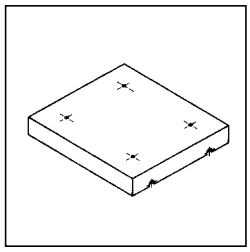

CSC
Protective Cowls
Protective cowls for external installations.

Type	Cowl Type
CVB-180	CSC – 180
CVB-240	CSC – 240
CVB-270	CSC – 270
CVB / T-320	CSC – 320

Dimensions (mm)

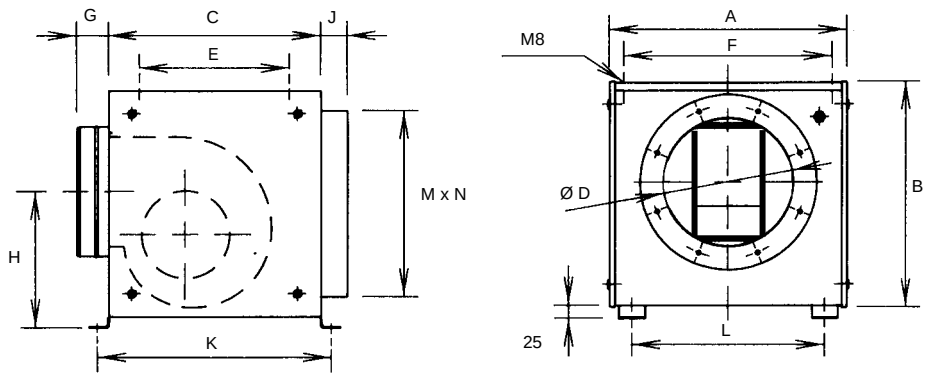

Type	A	B	C	Ø D	E	F	G	J	H	K	L	M x N
CVB-180	455	437	408	250	337	400	65	55	263	449	370	325 x 325
CVB-240	565	517	508	355	437	510	65	65	300	549	480	400 x 400
CVB-270	605	577	558	400	487	550	65	65	335	599	520	450 x 450
CVB/T-320	685	662	608	500	537	630	65	70	381	649	600	500 x 500

* Nominal ducting diameter.

Mounting options

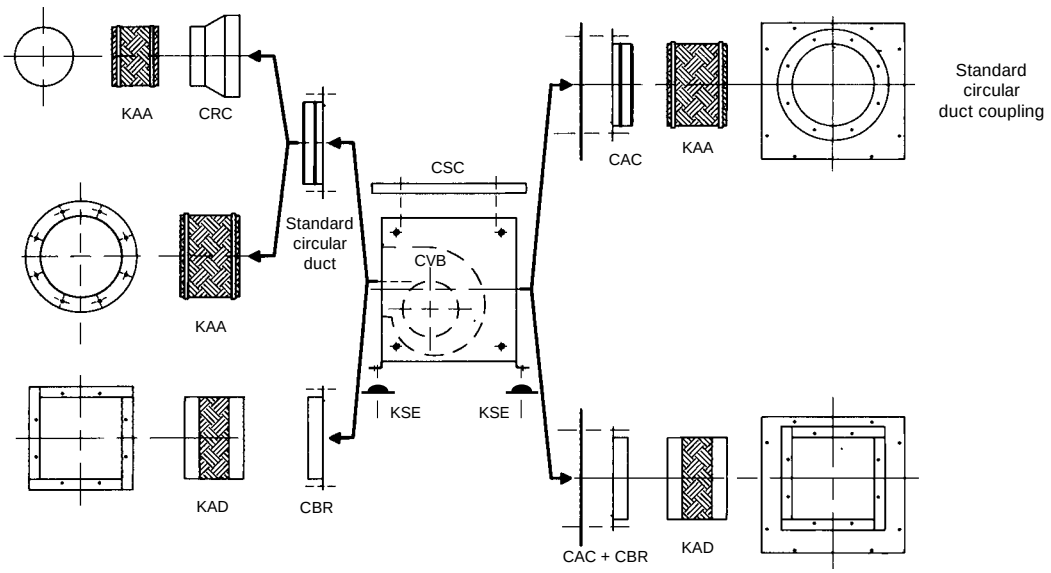

CBR – Rectangular duct connectors
CRC – Circular reducers
KAA – Flexible couplings
KAD – Flexible coupings
KSE – Anti-vibration mounts
CSC – Protective cowls

CVB – CVT: Centribox fans

Acoustic characteristics

Sound power spectrum: To obtain the sound power spectrum, subtract the correction values (dB(A)) shown in the table below at the corresponding octave average frequencies, from the value given in the Technical Characteristics table.

Type		63	125	250	500	1000	2000	4000	8000
CVB/180/180 1/10	Inlet	26	33	39	46	52	50	46	40
	Disc.	22	34	37	36	39	39	37	32
	Rad.	22	32	29	22	20	15	15	12
CVB/4-180/180 1/5	Inlet	31	37	43	49	54	53	50	43
	Disc.	27	38	40	39	42	42	41	34
	Rad.	27	36	32	25	23	18	19	14
CVB-240/180 1/6	Inlet	27	38	49	55	58	56	52	45
	Disc.	22	39	46	45	46	46	43	36
	Rad.	22	37	38	31	27	22	21	16
CVB-240/180 1/3	Inlet	32	41	51	57	60	58	54	46
	Disc.	23	39	45	43	44	44	40	33
	Rad.	23	37	37	29	25	20	18	13
CVB-240/240 1/6	Inlet	28	37	47	53	56	54	50	42
	Disc.	23	39	45	43	44	44	40	33
	Rad.	23	37	37	29	25	20	18	13
CVB-240/240 1/3	Inlet	33	42	50	55	58	56	50	43
	Disc.	29	44	48	45	46	46	41	35
	Rad.	29	42	40	31	27	22	19	15
CVB/4-240/240 1/2	Inlet	34	44	52	55	61	59	56	47
	Disc.	29	45	50	45	48	49	47	39
	Rad.	29	43	42	31	29	25	25	19
CVB-270/200 1/3	Inlet	30	41	49	56	60	60	57	50
	Disc.	25	42	47	46	47	49	47	41
	Rad.	25	40	39	32	28	25	25	21
CVB-270/200 1/2	Inlet	33	44	52	59	63	63	60	53
	Disc.	28	45	50	49	50	52	50	44
	Rad.	28	43	42	35	31	28	28	24

Type		63	125	250	500	1000	2000	4000	8000
CVB/4-270/200 1/2	Inlet	30	41	50	57	60	60	57	50
	Disc.	26	43	47	47	48	50	48	42
	Rad.	26	41	39	33	29	26	26	22
CVB-270/270 1/3	Inlet	30	40	48	54	58	57	53	46
	Disc.	25	42	45	44	46	46	44	38
	Rad.	25	40	37	30	27	22	22	18
CVB-270/270 1/2	Inlet	34	45	52	58	63	61	58	51
	Disc.	30	46	50	48	50	51	48	42
	Rad.	30	44	42	34	31	27	26	22
CVB/4-270/270 3/4	Inlet	36	48	54	56	61	60	57	49
	Disc.	32	49	51	46	48	49	47	40
	Rad.	32	47	43	32	29	25	25	20
CVB-320/240 3/4	Inlet	35	49	53	57	60	62	58	51
	Disc.	31	51	50	47	48	51	49	43
	Rad.	31	49	42	33	29	27	27	23
CVT-320/240 1,5	Inlet	49	53	57	61	64	66	62	55
	Disc.	45	55	54	51	52	55	53	47
	Rad.	45	53	46	37	33	31	31	27
CVB-320/320 3/4	Inlet	34	46	51	59	59	60	57	50
	Disc.	30	48	49	49	46	49	47	41
	Rad.	30	46	41	35	27	25	25	21
CVT-320/320 1,5	Inlet	40	52	57	64	64	65	62	55
	Disc.	35	53	54	54	52	55	53	47
	Rad.	35	51	46	40	33	31	31	27

Recommendations for installing the S&P acoustic case fan ranges

Do Not alter the inlet position of the fan.

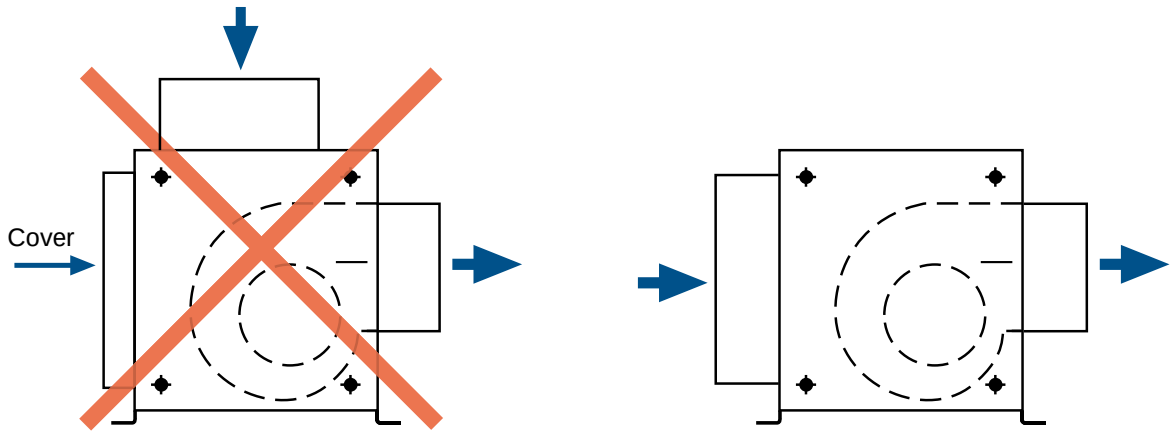

Recommendations for installing the S&P acoustic case fan ranges

When discharging to free air. Do Not install the fan discharge near walls or any objects that might prohibit the flow of air.

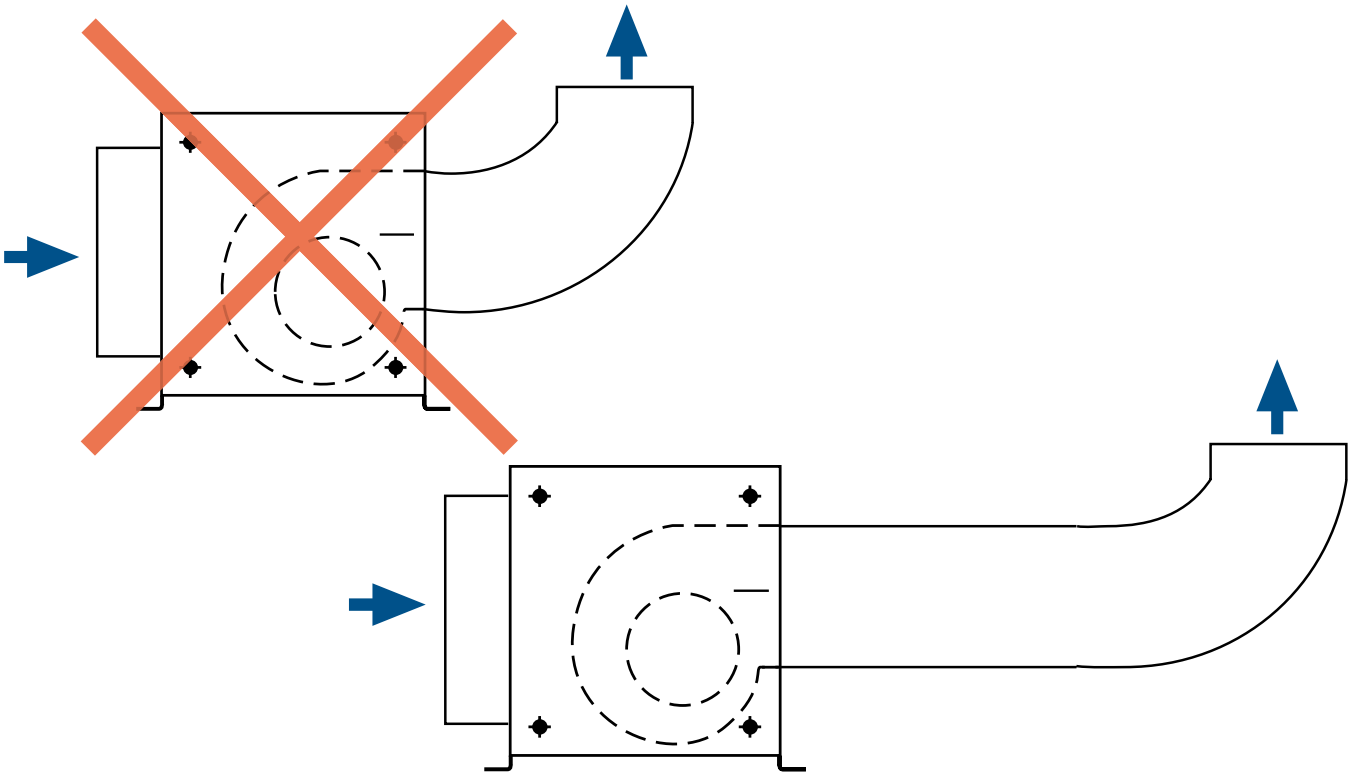

Avoid any sudden reductions in ducting diameters. Where possible use a gradually tapered reduction.

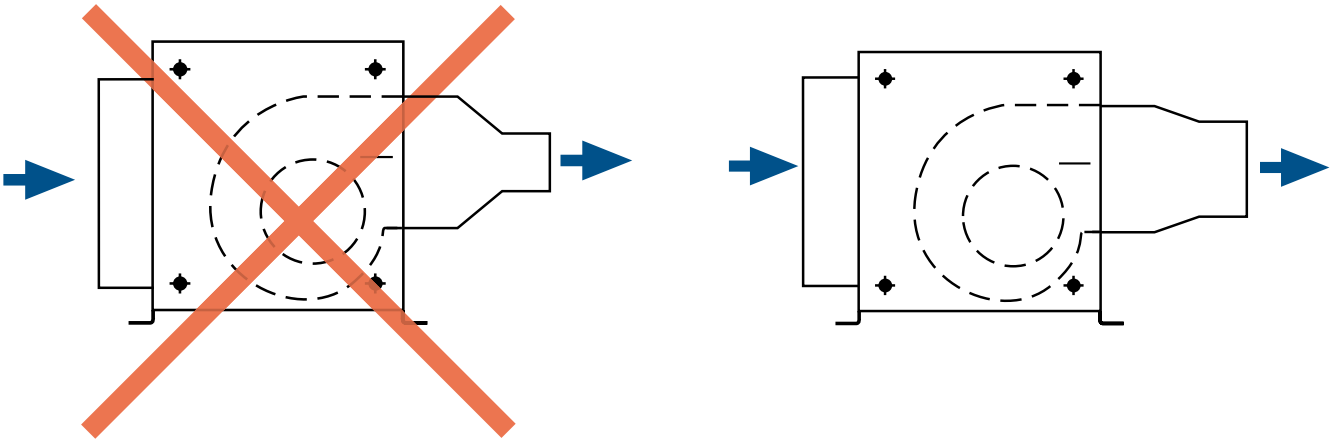
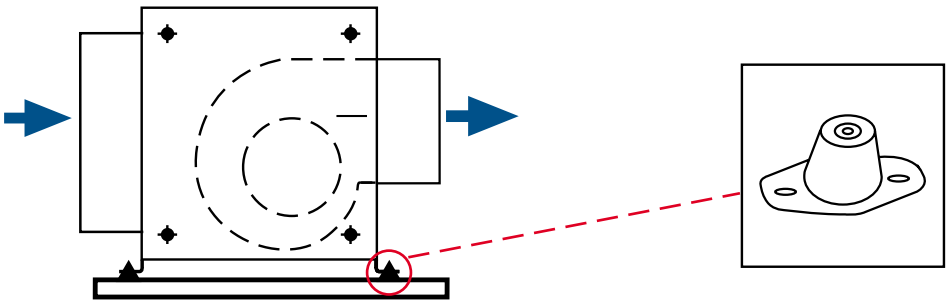
To eliminate any vibration to surrounding structures we would recommend, where possible; to fit S&P KSE anti-vibration mountings.